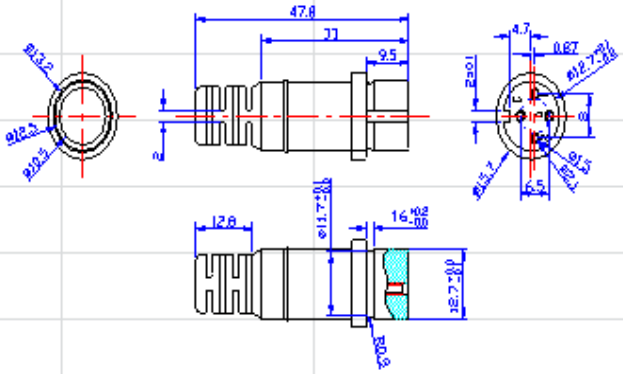

CY-OM173

Type of Cordage	No. of Conductors	Cross-section Area(No./mm)
2464	4C	18AWG

Descript 1.48Φ 4PIN防水母座