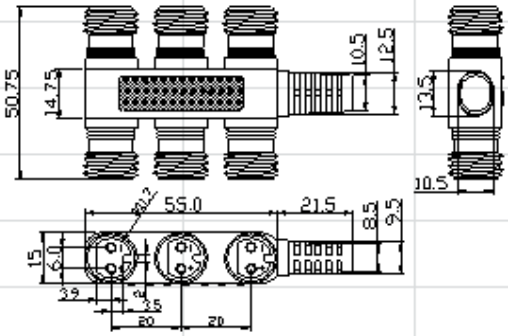

CY-OM89-1

Type of Cordage	No. of Conductors	Cross-section Area(No./mm)
SPT-2(W)	2C	18AWG
SPT-2(W)	2C	16AWG

Description: 一拖六2.35ΦDC防水母座.