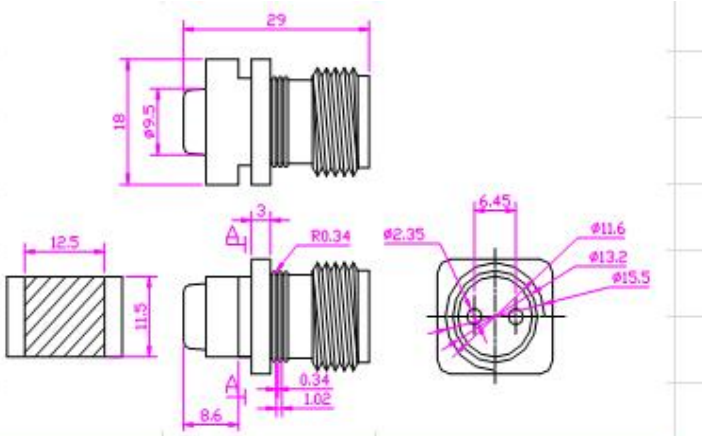

CY-OM77

Type of Cordage	No. of Conductors	Cross-section Area(No./mm)
H03VVH2-F	2C	0.75^2
1015	1C	16AWG
1015	1C	18AWG

Description: 2.35Φ防水母座 59SR